Preface

Thank you for purchasing KE300A-01 series solar pump inverters.

This manual describes how to use KE300A-01 series inverter properly. Please read it carefully before installation, operation, maintenance and inspection. Besides, please use the product after understanding the safety precautions.

Precautions
● In order to describe the product's details, the drawings presented in this instruction are sometimes shown without covers or protective guards. When using the product, please make sure to install the cover or protective guard as specified firstly, and operate the products in accordance with the instructions. ● Since the drawings in this manual are represented examples, some are subject to differ from delivered products. ● This manual may be modified when necessary because of improvement of the product, modification or changes in specifications. Such modifications are denoted by a revised manual No.. ● If you want to order the manual due to loss or damage, please contact our company agents in each region or our company customer service center directly. ● If there is still any problem during using the products, please contact our company customer service center directly.

Contents

Chapter 1 Safety and Precautions 1
1.1 Safety Precautions 1
1.2 Precautions 3
Chapter 2 Product Information 6
2.1 Product Inspection 6
2.2 Model Description 6
2.3 Selection Guide 6
2.4 Technical Specifications 7
2.5 External & Installation Dimensions 9
2.6 Wiring Diagram 16
2.7 Main Circuit Terminals and Connections 17
2.8 Control Terminals and Connections 17
2.9 Instructions on Warranty 19
Chapter 3 Operation and Display 20
3.1 Keypad Description 20
3.2 Function Code Checking and Modification Methods Description 21
3.3 Power-on Initialization 22
3.4 Fault Protection 22
3.5 Stand By 22
3.6 Running 23
3.7 Password Setting 23
Chapter 4 Parameters Description 24
Group P0 Basic Function 24
Group P1 Motor Parameters 26
Group P3 V/F Control Parameters 27
Group P4 Input Terminal 29
Group P5 Output Terminal 34
Group P6 Start and Stop Control 36
Group P9 Fault and Protection 38
Group PP Function Code Management 43
Group PC Special Parameters for Solar Pump Inverter 44
Chapter 5 Trouble Shooting 48
5.1 Fault and Trouble Shooting 48
5.2 Common Faults and Solutions 55
Chapter 6 Commissioning Guide 56

Chapter 1 Safety and Precautions

Safety definition:

In this manual, safety precautions are classified as follows:

Danger: Operations which are not performed according to requirements may cause serious equipment loss or personnel injury.

Caution: Operations which are not performed according to requirements may cause medium hurt or light hurt or material loss.

During the installation, commissioning and maintenance of the system, please make sure to follow the safety and precautions of this chapter. In case of a result of illegal operations, caused any harm and losses is nothing to do with the company.

1.1 Safety Precautions

1.1.1 Before Installation:

Danger	● Do not use the water-logged inverter, damaged inverter or inverter with missing parts. Otherwise, there may be risk of injury. ● Use the motor with Class B or above insulation. Otherwise, there may be risk of electric shock.
Caution	● Carefully handled when loading, otherwise it may damage the inverter. ● Please don't use the damaged drive or inverter with missing parts, there may be risk of injury. ● Do not touch the electronic parts and components; otherwise it will cause static electricity.

1.1.2 During Installation:

Danger	● Install the inverter on incombustible surface such as metal, and keep away from flammable substances. Otherwise it may cause fire. ● Do not loose the set screw of the equipment, especially the screws marked in RED.
Caution	● Do not drop the cable residual or screw in the inverter. Otherwise it may damage the inverter. ● Please install the drive in the place where there is no direct sunlight or less vibratory. ● When more than two inverters are to be installed in one cabinet, due attention should be paid to the installation locations (refer to Chapter 3 Mechanical and Electrical Installation) to ensure the heat sinking effect.

1.1.3 During Wiring:

Danger	● Operation should be performed by the professional engineering technician. Otherwise there will be danger of electric shock! ● There should be circuit breaker between the inverter and power supply. Otherwise, there may be fire! ● Make sure the power is disconnected prior to the connection. Otherwise there will be danger of electric shock! ● The ground terminal should be earthed reliably. Otherwise there may be danger of electric shock.
Caution	● Never connect AC power to output UVW terminals. Please note the remark of the wiring terminals, connect them correctly. Otherwise may cause inverter damaged. ● Ensure the wiring circuit can meet the requirement of EMC and the area safety standard. Please follow the instructions in the manual before wiring. Otherwise may cause injury or electric shock. ● Never connect the braking resistor between DC bus (+), (-) terminals. Otherwise may cause fire. ● Encoder must be used together with shielded wire, and ensure the single terminal of the shielded lay is connected with ground well.

1.1.4 Before Power-on:

Danger	● Please confirm whether the power voltage class is consistent with the rated voltage of the inverter and whether the I/O cable connecting positions are correct, and check whether the external circuit is short circuited and whether the connecting line is firm. Otherwise it may damage the inverter. The cover must be well closed prior to the inverter power-on. Otherwise electric shock may be caused. ● The inverter is free from dielectric test because this test is performed prior to the delivery. Otherwise accident may occur.
Caution	● The cover must be well closed prior to the inverter power-on. Otherwise electric shock may be caused! ● Whether all the external fittings are connected correctly in accordance with the circuit provided in this manual. Otherwise accident may occur!

1.1.5 After Power-on:

Danger	● Do not open the cover of the inverter upon power-on. Otherwise there will be danger of electric shock! ● Do not touch the inverter and its surrounding circuit with wet hand. Otherwise there will be danger of electric shock! ● Do not touch the inverter terminals (including control terminal). Otherwise there will be danger of electric shock! ● At power-on, the inverter will perform the security check of the external heavy-current circuit automatically. Thus, at the moment please do not touch the terminals U, V and W, or the terminals of motor, otherwise there will be danger of

	electric shock.
Caution	● If parameter identification is required, due attention should be paid to the danger of injury arising from the rotating motor. Otherwise accident may occur! ● Do not change the factory settings at will. Otherwise it may damage the equipment!

1.1.6 During Operation:

Danger	● Do not touch the fan or discharge resistor to sense the temperature. Otherwise, you may get burnt! ● Detection of signals during the operation should only be conducted by qualified technician. Otherwise, personal injury or equipment damage may be caused!
Caution	● During the operation of the inverter, keep items from falling into the equipment. Otherwise, it may damage the equipment! ● Do not start and shut down the inverter by connecting and disconnecting the contactor. Otherwise, it may damage the equipment!

1.1.7 During Maintain:

Danger	● Do not repair and maintain the equipment with power connection. Otherwise there will be danger of electric shock! ● Be sure to conduct repair and maintenance after the charge LED indicator of the inverter is OFF. Otherwise, the residual charge on the capacitor may cause personal injury! ● The inverter should be repaired and maintained only by the qualified person who has received professional training. Otherwise, it may cause personal injury or equipment damage! ● Carry out parameter setting after replacing the inverter, all the plug-ins must be plug and play when power outage.

1.2 Precautions

1.2.1 Motor Insulation Inspection

When the motor is used for the first time, or when the motor is reused after being kept, or when periodical inspection is performed, it should conduct motor insulation inspection so as to avoid damaging the inverter because of the insulation failure of the motor windings. The motor wires must be disconnected from the inverter during the insulation inspection. It is recommended to use the 500V megameter, and the insulating resistance measured should be at least 5MΩ.

1.2.2 Thermal Protection of the Motor

If the ratings of the motor does not match those of the inverter, especially when the rated power of the inverter is higher than the rated power of the motor, the relevant motor protection parameters in the in the inverter should be adjusted, or thermal relay should be mounted to protect the motor.

1.2.3 Running with Frequency higher than Standard Frequency

This inverter can provide output frequency of 0Hz to 3000Hz. If the user needs to run the inverter with frequency of more than 50Hz, please take the resistant pressure of the mechanical devices into consideration.

1.2.4 Vibration of Mechanical Device

The inverter may encounter the mechanical resonance point at certain output frequencies, which can be avoided by setting the skip frequency parameters in the inverter.

1.2.5 Motor Heat and Noise

Since the output voltage of inverter is PWM wave and contains certain harmonics, the temperature rise, noise and vibration of the motor will be higher than those at power frequency.

1.2.6 Voltage-sensitive Device or Capacitor Improving Power Factor at the Output Side

Since the inverter output is PWM wave, if the capacitor for improving the power factor or voltage-sensitive resistor for lightning protection is mounted at the output side, it is easy to cause instantaneous over current in the inverter, which may damage the inverter. It is recommended that such devices not be used.

1.2.7 Switching Devices like Contactors Used at the Input and Output terminal

If a contactor is installed between the power supply and the input terminal of the inverter, it is not allowed to use the contactor to control the startup/stop of the inverter. If such contactor is unavoidable, it should be used with interval of at least one hour. Frequent charge and discharge will reduce the service life of the capacitor inside the inverter. If switching devices like contactor are installed between the output end of the inverter and the motor, it should ensure that the on/off operation is conducted when the inverter has no output. Otherwise the modules in the inverter may be damaged.

1.2.8 Use under voltage rather than rated voltage

If the KE series inverter is used outside the allowable working voltage range as specified in this manual, it is easy to damage the devices in the inverter. When necessary, use the corresponding step-up or step-down instruments to change the voltage.

1.2.9 Change Three-phase Input to Two-phase Input

It is not allowed to change the KE series three-phase inverter into two-phase one. Otherwise, it may cause fault or damage to the inverter.

1.2.10 Lightning Impulse Protection

The series inverter has lightning over current protection device, and has certain self-protection capacity against the lightning. In applications where lightning occurs frequently, the user should install additional protection devices at the front-end of the inverter.

1.2.11 Altitude and Derating

In areas with altitude of more than 1,000 meters, the heat sinking effect of the inverter may turn poorer due to rare air. Therefore, it needs to derate the inverter for use. Please contact our company for technical consulting in case of such condition.

1.2.12 Certain Special Use

If the user needs to use the inverter with the methods other than the recommended wiring diagram in this manual, such as shared DC bus, please consult our company.

1.2.13 Note of Inverter Disposal

The electrolytic capacitors on the main circuit and the PCB may explode when they are burnt. Emission of toxic gas may be generated when the plastic parts are burnt. Please dispose the inverter as industrial wastes.

1.2.14 Adaptable Motor

1) The standard adaptable motor is four-pole squirrel-cage asynchronous induction motor. If such motor is not available, be sure to select adaptable motors in according to the rated current of the motor. In applications where drive permanent magnetic synchronous motor is required, please consult our company;

2) The cooling fan and the rotor shaft of the non-variable-frequency motor adopt coaxial connection. When the rotating speed is reduced, the cooling effect will be poorer. Therefore, a powerful exhaust fan should be installed, or the motor should be replaced with variable frequency motor to avoid the over heat of the motor.

3) Since the inverter has built-in standard parameters of the adaptable motors, it is necessary to perform motor parameter identification or modify the default values so as to comply with the actual values as much as possible, or it may affect the running effect and protection performance;

4) The short circuit of the cable or motor may cause alarm or explosion of the inverter. Therefore, please conduct insulation and short circuit test on the newly installed motor and cable. Such test should also be conducted during routine maintenance. Please note that the inverter and the test part should be completely disconnected during the test.

Chapter 2 Product Information

2.1 Product Inspection

Checking the following items when receiving the inverter

Confirmation Items	Method
Confirm if the inverter is what you ordered	Check name plate
Damaged or not	Inspect the entire exterior of the inverter to see if there are any scratches or other damage resulting from shipping
Confirm if the fastening parts (screws, etc.) are loose or not	Check with a screw driver if necessary
User's manual, certification and other spares	User's manual and the relative spares

Please contact the local agent or our company directly if there is any damage on the inverter

2.2 Model Description

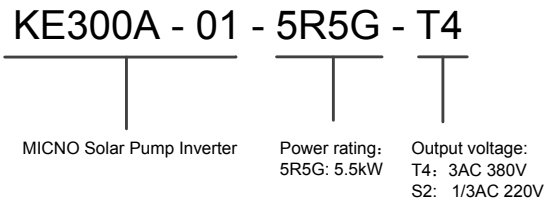

Figure 2-1 Model description

2.3 Selection Guide

Table 2-1 KE300A-01 Series Inverter Model and Technical Data

Model	motor		Rated output current （A）	Suggested open circuit voltage （V）
	kW	HP		
Single phase output 220V				
KE300A-01-04-0R4G-S2	0.4	0.5	4	350~400
KE300A-01-04-0R7G-S2	0.75	1	7	350~400
KE300A-01-04-1R5G-S2	1.5	2	9.6	350~400
KE300A-01-04-2R2G-S2	2.2	3	15	350~400
KE300A-01-04-004G-S2	4.0	5	23	350~400
KE300A-01-04-5R5G-S2	5.5	7.5	32	350~400
Three phase output 220V				
KE300A-01-0R4G-S2	0.4	0.5	2.3	350~400
KE300A-01-0R7G-S2	0.75	1	4	350~400
KE300A-01-1R5G-S2	1.5	2	7	350~400

KE300A-01-2R2G-S2	2.2	3	9	350~400
KE300A-01-004G-S2	4.0	5	17	350~400
KE300A-01-5R5G-S2	5.5	7.5	25	350~400
KE300A-01-7R5G-S2	7.5	10	32	350~400
KE300A-01-011G-S2	11	15	45	350~400
Three phase output 380V				
KE300A-01-0R7G-T4	0.75	1	2.1	625~750
KE300A-01-1R5G-T4	1.5	2	3.8	625~750
KE300A-01-2R2G-T4	2.2	3	6.0	625~750
KE300A-01-004G-T4	4.0	5	9	625~750
KE300A-01-5R5G-T4	5.5	7.5	13	625~750
KE300A-01-7R5G-T4	7.5	10	17	625~750
KE300A-01-011G-T4	11	15	25	625~750
KE300A-01-015G-T4	15	20	32	625~750
KE300A-01-018G-T4	18.5	25	37	625~750
KE300A-01-022G-T4	22	30	45	625~750
KE300A-01-030G-T4	30	40	60	625~750
KE300A-01-037G-T4	37	50	75	625~750
KE300A-01-045G-T4	45	60	90	625~750
KE300A-01-055G-T4	55	75	110	625~750
KE300A-01-075G-T4	75	100	150	625~750
KE300A-01-090G-T4	90	125	176	625~750
KE300A-01-110G-T4	110	150	210	625~750

2.4 Technical Specifications

Table 2-2 KE300A-01 Series Inverter Technical Specifications

Item	Technical Index	Specification
Input	Input DC voltage	350~400V (220V inverter) 625~750V (380V inverter)
Output	Output voltage	0～rated input voltage
	Output frequency	V/f control: 0~3000Hz Sensorless vector control: 0~300Hz
Control Features	Control mode	V/f control Sensorless vector control
	Operation command mode	Keypad control Terminal control Serial communication control
	Frequency setting mode	MPPT automatic regulation
	Overload capacity	150% 60s, 180% 10s, 200% 3s.
	Starting torque	0.5Hz/150% (SVC); 1Hz/150% (V/f)
	Speed adjustment range	1:100 (SVC), 1:50 (V/f)
	Speed control	±0.5% (SVC)

	precision	
	Carrier frequency	1.0~16.0kHz, automatically adjusted according to temperature and load characteristics
	Frequency accuracy	Digital setting: 0.01Hz Analog setting: maximum frequency * 0.05%
	Torque boost	Automatically torque boost; manually torque boost: 0.1%~30.0%
	V/f curve	Three types: linear, multiple point and square type (1.2 power, 1.4 power, 1.6 power, 1.8 power, square)
	Acceleration/deceleration mode	Straight line / S curve; four kinds of acceleration/deceleration time, range: 0.1s~3600.0s
Control Function	Over-voltage & over-current stall control	Limit current & voltage automatically during the running process, prevent frequent over-current & over-voltage tripping
	Fault protection function	Up to 30 fault protections including over-current, over-voltage, under-voltage, overheating, default phase, overload, shortcut, etc., can record the detailed running status during failure & has fault automatic reset function
	Special functions for solar pump system	MPPT (Maximum Power Point Tracking), dry tap protection, water level sensor failure protection, full water warning, weak sunshine warning, full automatic running.
Input/output terminals	Input terminals	Programmable DI: 7 on-off inputs, 1 high-speed pulse input 2 programmable AI: AI1: 0～10V or 0/4～20mA A12: 0～10V or 0/4～20mA
	Output terminals	1 programmable open collector output: 1 analog output (open collector output or high-speed pulse output) 2 relay output 2 analog output: 0/4~20mA or 0~10V
	Communication terminals	Offer RS485 communication interface, support MODBUS-RTU communication protocol
Human machine interface	LED display	Display frequency setting, output frequency, output voltage, output current, etc.
	Multifunction key	QUICK/JOG key, can be used as multifunction key
Environment	Ambient temperature	-10℃～40℃, derated 4% when the temperature rise by every 1℃ (40℃～50℃).
	Humidity	90%RH or less (non-condensing)
	Altitude	≤1000M: output rated power, ＞1000M: output derated
	Storage temperature	-20℃～60℃

2.5 External & Installation Dimensions

2.5.1 Single phase output 220V inverter

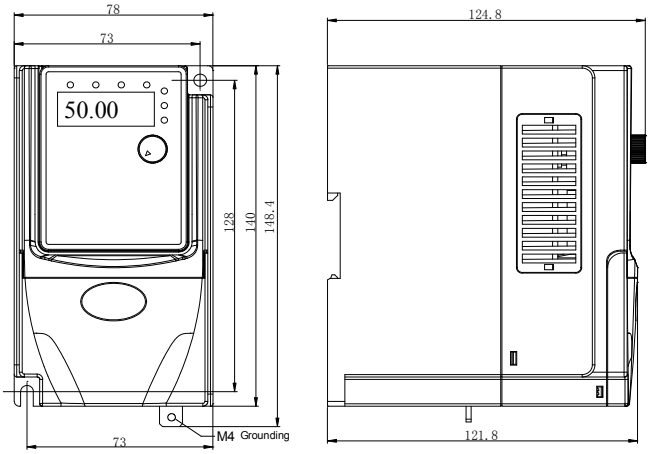

0.4~1.5kW

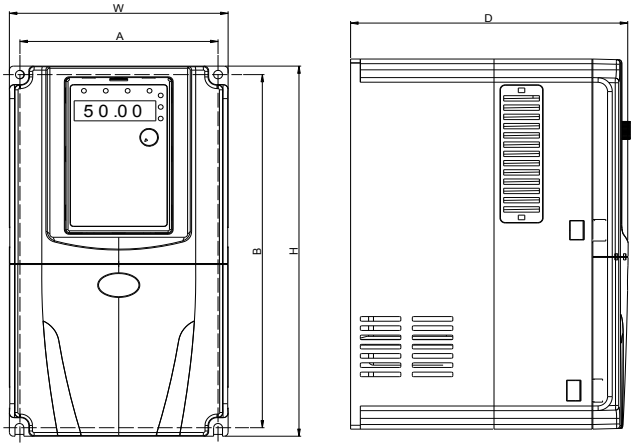

2.2kW

Power Range	External Dimension (mm)			Installation Dimension (mm)		Mounting Bolt Model
	W	H/H1	D/D1	A	B	
0.4~1.5kW	78	140/148.4	124.8/121.8	73	128	M4
2.2kW	135	240	173	122.6	229	M4

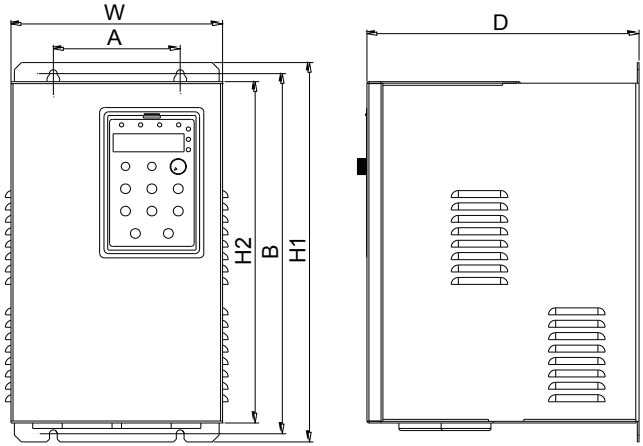

4.0～5.5kW

Power range	External dimension (mm)				Installation Dimension (mm)		Mounting Bolt Model
	W	H1	H2	D	A	B	
4.0kW	170	314	285	167	90	301.6	M4
5.5kW	200	329.1	300	177.2	90	316.6	M4

2.5.2 Three phase output 220V inverter

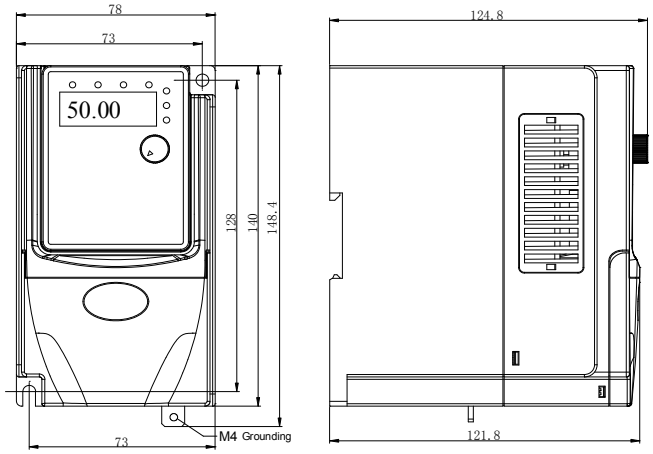

0.4~1.5kW

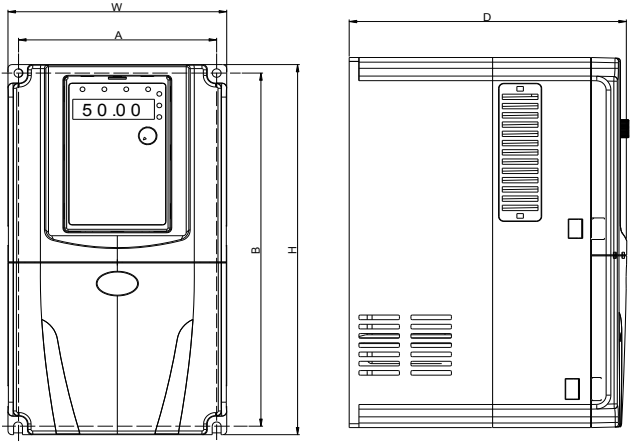

2.2~4.0kW

Power Range	External Dimension (mm)			Installation Dimension (mm)		Mounting Bolt Model
	W	H/H1	D/D1	A	B	
0.4~1.5kW	78	140/148.4	124.8/121.8	73	128	M4
2.2kW	110	185	153	98	174	M4
4.0kW	135	240	173	122.6	229	M4

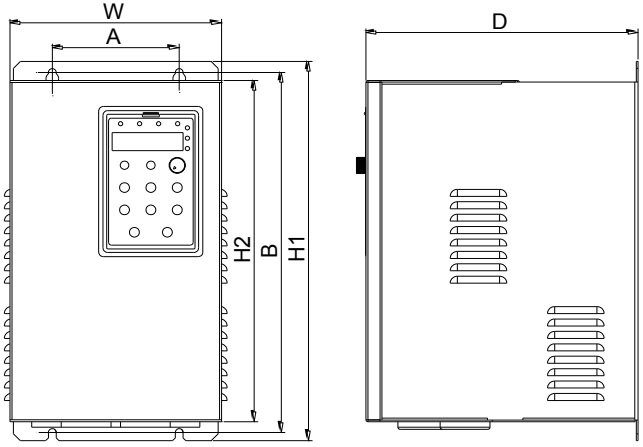

5.5～11kW

Power Range	External Dimension (mm)				Installation Dimension (mm)		Mounting Bolt Model
	W	H1	H2	D	A	B	
5.5kW	170	314	285	167	90	301.6	M4
7.5kW	200	329.1	300	177.2	90	316.6	M4
11kW	225	397.6	365	185.2	120	384.1	M5

2.5.3 Three phase output 380V inverter

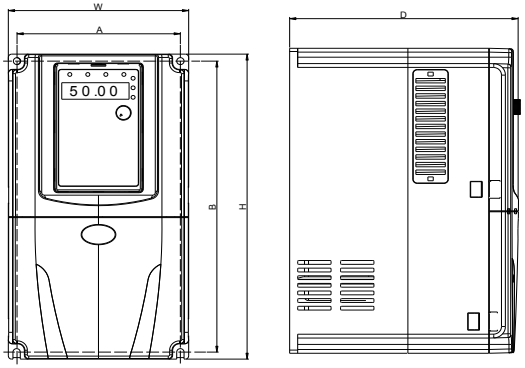

0.75～5.5kW

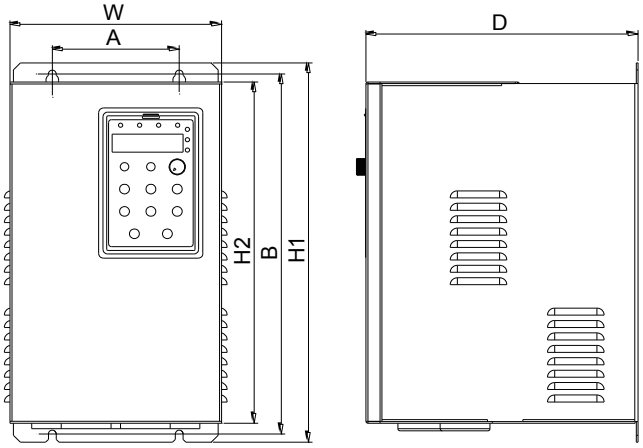

7.5～30kW

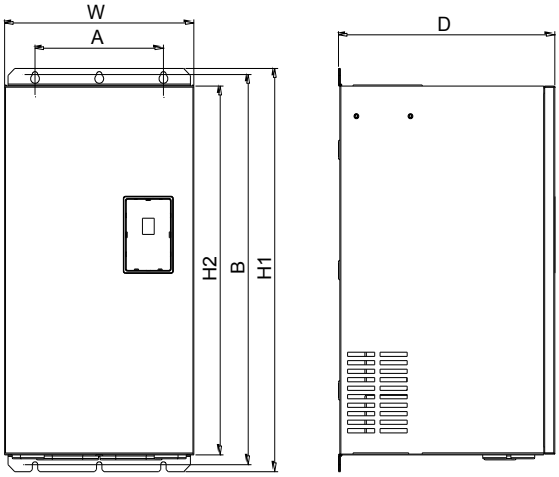

37～110kW

Power range	External dimension (mm)				Installation dimentsion (mm)		Mounting Bolt Model
	W	H1	H2	D	A	B	
0.75~2.2kW	110	185		153	98	174	M4
4.0~5.5kW	135	240		173	122.6	229	M4
7.5kW	170	314	285	167	90	301.6	M4
11~15kW	200	329.1	300	177.2	90	316.6	M4
18.5~22kW	225	397.6	365	185.2	120	384.1	M5
30kW	255	439.6	402.4	209.6	140	423.6	M5
37~45kW	280	570	521.2	258	190	552	M6
55~75kW	320	600	552	330	230	582	M8
90~110kW	320	715	662	330	230	695.5	M8

2.5.4 Keypad External Dimension

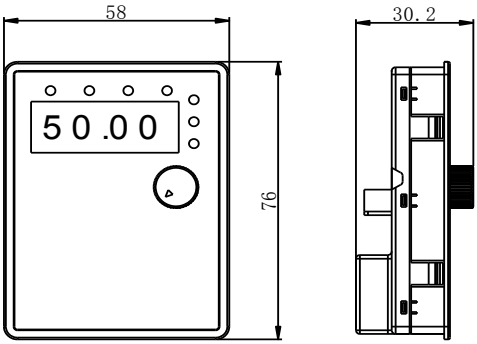

Keypad dimension of 1AC/3AC 220V 0.4~1.5kW inverters

Illustration: This keypad can be connected with the inverter externally by ordinary network cable, also can be mounted on the front side of panel directly. The suggested thickness of panel is 1.2mm.

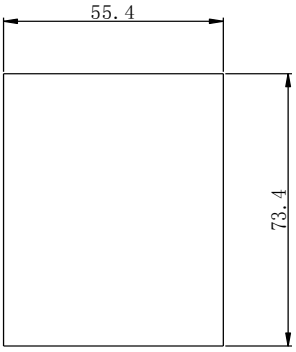

The installation size on the panel while using this keypad

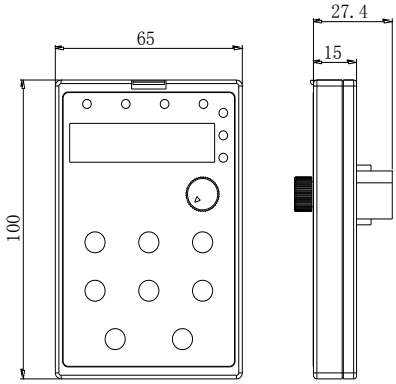

Keypad dimension of other power rating inverters

Illustration: This keypad can be connected with the inverter externally by ordinary network cable, and it needs an additional bracket to fix it.

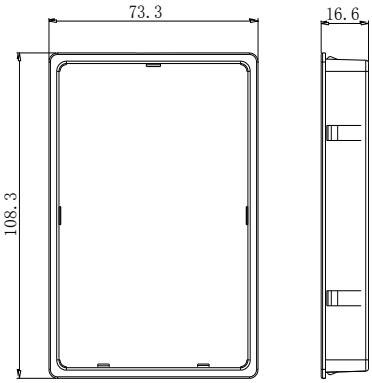

65*100mm keypad bracket dimension

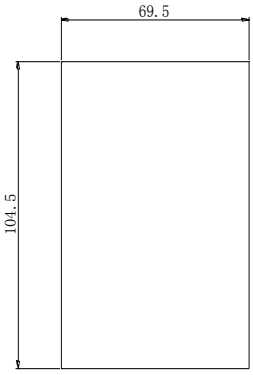

65*100mm hole dimension of keypad bracket

2.6 Wiring Diagram

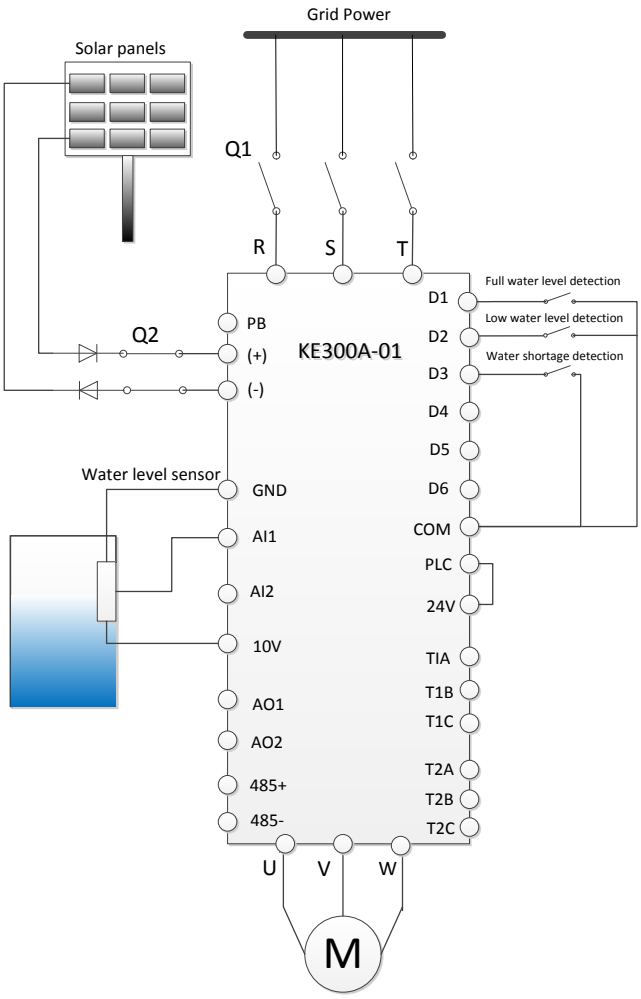

Figure 2-2 Wiring Diagram of solar pump inverter

2.7 Main Circuit Terminals and Connections

Instructions of main circuit terminals:

Terminal	Name	Description
R, S, T (3 AC) L, N (1 AC)	Input terminals of DC voltage (from solar panels)	1.Connect with any two terminals, recommend R & T 2. If there are (+) & (-) terminals, please connect (+) & (-) prior
(+) , (-)	Negative and positive terminals of DC bus	Common DC bus input point (connection point of external brake unit of the inverter above 15kW 220V and above 30kW other voltages)
(+) , PB	Connection terminal of brake resistor	Connection point of brake resistor of the inverter below 18.5kW (220V) & the inverter below 37kW (other voltages)
P1, (+)	Connection terminal of external DC reactor	Connection point of external DC reactor
U, V, W	Output terminal of inverter	Connect to the three phase motor
⏚	Earth terminal	Earth connection terminal

Precautions on Wiring:

a) Input power R, S, T or L, N:
The DC power supply (from solar panels) should connect with any two terminals.

b) Terminals U, V, W at the output side of the inverter:
The inverter output side cannot connect to the capacitor or surge absorber. Otherwise, it may cause frequent inverter protection and even damage the inverter.
In case the motor cable is too long, it may generate electrical resonance easily due to the impact of distributed capacitance, thus damaging the motor insulation or generating higher leakage current to invoke over current protection of the inverter. When the length of motor cable is longer than 100 meters, it needs to install an AC output reactor.

c) Earth terminal PE⏚:
This terminal should be earthed reliably, with resistance of earth cable of less than 0.1Ω. Otherwise, it may cause fault or damage the inverter.
Do not share the earth terminal ⏚ and zero line of the power supply.

2.8 Control Terminals and Connections

1) Control circuit terminals

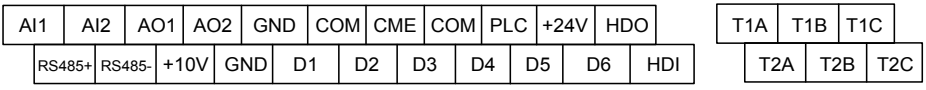

Figure 2-3 Control Circuit Terminals

2) Function description of control terminal

Table 2-3 Description of Control Terminal Function

Type	Terminal Symbol	Terminal Name	Function Description
Power Supply	+10V~GND	External +10V power	Provide +10V power supply for external units, and the maximum output current is 10mA. It is generally used as the operating power supply for the external potentiometer. The potentiometer resistance range is 1kΩ~5kΩ.
	+24V~COM	External +24V power	Provide +24V power supply for external units. It is generally used as the operating power supply for digital input/output terminals and the external sensor. The maximum output current is 200mA.
	PLC	External power input terminal	Connect to 24V by default upon delivery When external signal is used to drive D1~D6, and HDI, PLC needs to connect to the external power supply and disconnect from the +24V power terminal
Analog Input	AI1~GND	Analog input terminal 1	1. Input range: DC 0V~10V/4mA~20mA, determined by J1 jumper on the control board. 2. Input impedance: 20kΩ (voltage); 500Ω(current)
	AI2~GND	Analog input terminal 2	1. Input range: DC 0V~10V/4mA~20mA, determined by J2 jumper on the control board. 2. Input impedance: 20kΩ (voltage); 500Ω(current)
Digital Input	D1	Digital input 1	1. Optical coupling isolation, compatible with dual polarity input 2. Input impedance: 4.7kΩ 3. Voltage range for level input: 9V~30V
	D2	Digital input 2	
	D3	Digital input 3	
	D4	Digital input 4	
	D5	Digital input 5	
	D6	Digital input 6	
	HDI~CME/D7~COM	High-speed pulse input terminal	In addition to the characteristics of D1 to D6, it can also be used as the high speed pulse input channel. Maximum input frequency is 100kHz Caution: The CME is internally insulated with the COM, but they have been short circuited externally (HDI is driven by +24V by default prior to delivery). When HDI needs to be driven by the external power, the short circuited between CME and COM must be disconnected.
Analog Output	AO1~GND	Analog output 1	The voltage or current output is determined by J3 jumper on the control board. Output voltage range: 0V~10V. Output current range: 0mA ~ 20mA.
	AO2~GND	Analog output 2	The voltage or current output is determined by J4 jumper on the control board. Output voltage range: 0V~10V. Output current range: 0mA ~ 20mA.

Digital Output	HDO~CME	High speed pulse output / open collector output	It can be used as high speed pulse output or open collector output which is determined by function code P5-00. High speed pulse output: maximum frequency is 100kHz Open collector output :Optical coupling isolation, dual polarity Output voltage range: 0V~24V Output current range: 0mA~50mA Note: The CME is internally insulated with the COM, but they have been short circuited externally (HDO is driven by +24V by default prior to delivery).
Relay Output 1	T1B-T1C	Normally closed terminal	Driving capacity: AC 250V, 3A, COSØ=0.4 DC 30V, 1A
	T1A-T1C	Normally open terminal	
Relay Output 2	S2B-S2C	Normally closed terminal	Driving capacity: AC 250V, 3A, COSØ=0.4 DC 30V, 1A
	S2A-S2C	Normally open terminal	

2.9 Instructions on Warranty

Free warranty only applies to the inverter itself.

1) MICNO provides 12 month warranty (starting from the date of original shipment as indicated on the barcode) for the failure or damage under normal use conditions. If the equipment has been used for over 18 months, reasonable repair expenses will be charged.

2) Reasonable repair expenses will be charged for the following situations within 12 months:

a) The equipment is damaged because the user fails to comply with the requirements of the user's manual;

b) Damage caused by fire, flood and abnormal voltage;

3) Damage caused when the inverter is used for abnormal function.

The service expenses will be calculated according to the standard of the manufacturer. If there is any agreement, the agreement should prevail.

Chapter 3 Operation and Display

3.1 Keypad Description

With the operation keypad, it can perform such operations on the inverter as function parameter modification, working status monitor and running control (start and stop).

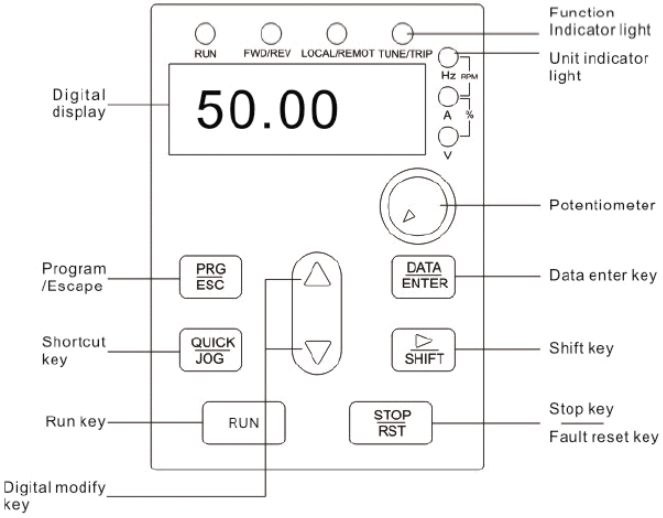

Figure 3-1 Operation Keypad Diagram

1) Function key description

Function indicator	Description
RUN	Extinguished: stop status Light on: operating status
FWD/REV	Extinguished: forward operation Light on: reverse operation
LOCAL/REMOT	Extinguished: keypad control Flickering: communication control Light on: terminal control
TUNE/TRIP	Light on: torque control Flickering slowly: parameter autotuning status Flickering quickly: fault status

2) Unit indicator light description

Unit indicator	Description
Hz	Frequency unit
A	Current unit
V	Voltage unit
RPM	Rotation speed unit
%	Percentage

3) Digital display zone

Five-number digit LED display, can display setting frequency, output frequency, various monitoring data and alarm code.

4) Keypad button description

Button	Name	Function
PRG/ESC	Programming key	Entry and exit of primary menu
DATA/ENTER	Confirmation key	Progressively enter menu, and confirm parameters
△	Increment key	Progressively increase of data or function codes
▽	Decrement key	Progressively decrease of data or function codes
▷	Shift key	Select the displayed parameters in turn on the stop display interface and running display interface, and select the modification bit of parameters when modifying parameters.
RUN	Running key	Start to run inverter under keyboard control mode
STOP/RST	Stop/reset	Stop inverter in running status and reset operation in fault alarm status. The button's characteristics are restricted by function code P7-02.
QUICK/JOG	Multi-function selection key	According to P7-01, take function switching selection.

3.2 Function Code Checking and Modification Methods Description

The operation keypad of the KE300A-01 Series Inverter adopts three-level menu structure to carry out operations such as parameter setting.
The three-level menu includes function parameter group (level 1 menu) → Function code (level 2 menu) → Function code setting value (level 3 menu). Refer to Figure 4-2 for the operation procedure.

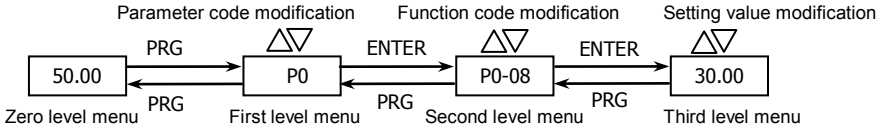

Figure 3-2 Operation Procedure of Three-level Menu

Description: When operating on level 3 menu, press PRG key or ENTER key to return to level 2 menu. The difference between PRG key and ENTER key is described as follows: Pressing ENTER KEY will save the setup parameter and return to the level 2 menu and then automatically shift to the next function code, while pressing PRG key will directly return to level 2 menu without saving the parameter, and it will return to the current function code.

Example: Modify the function code P3-02 from 10.00Hz to 15.00Hz. (The bold-type word indicates the flashing bit.)

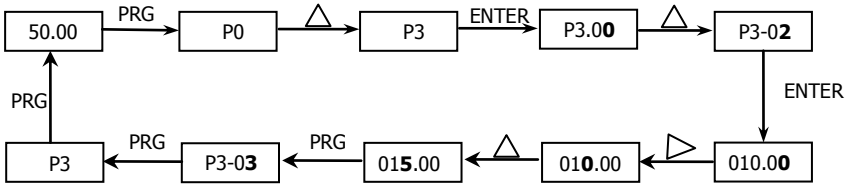

In level 3 menu, if there is no flashing bit, it indicates that the function code cannot be modified. The possible reasons include:

1) The function code is an unchangeable parameter, such as actual detection parameter, running record parameter, etc.

2) The function code cannot be modified in running status. It can be modified only after the unit is stopped.

3.3 Power-on Initialization

Firstly the system initializes during the inverter power-on, and LED displays “8.8.8.8.8.8”. After initialization, the inverter is in fault protection status if a fault happens, or the inverter is in stand-by status

3.4 Fault Protection

In fault status, inverter will display fault code & record output current, output voltage, etc. For details, please refer to P9 (fault and protection) parameter group. Fault can be reset via STOP/RST key or external terminals.

3.5 Stand By

In stop or stand by status, parameters of multi-status can be displayed. Whether or not to display this parameter can be chosen through function code P7-05 (Stop status display parameter) according to binary bits.

In stop status, there are thirteen parameters can be chosen to display or not. They are: setting frequency, bus voltage, DI input status, DO output status, analog input AI1 voltage, analog input AI2 voltage, radiator temperature, count value, actual length, PLC running step, load speed display, PID setting, HDI input pulse

frequency. The displaying of the chosen parameters can be switched in sequence by press “ ▷ ” button. Power on after power-off, the displayed parameters would be default considered as the chosen parameters before power-off.

3.6 Running

In running status, there are thirty two parameters can be chosen to display or not through function code P7-04 (running status display parameter 2) according to binary bits. They are: running frequency, setting frequency, DC bus voltage, output voltage, output current, output torque, DI input status, DO output status, analog input AI1 voltage, analog input AI2 voltage, radiator temperature, actual count value, actual length, line speed, PID setting, PID feedback, etc. The displaying of the chosen parameters can be switched in sequence by pressing “▷ ” button.

3.7 Password Setting

The inverter provides user password protection function. When PP-00 is set to non-zero value, it indicates the user password, and the password protection turns valid after exiting the function code editing status. When pressing PRG key again, “------“will be displayed, and common menu cannot be entered until user password is input correctly.

To cancel the password protection function, enter with password and set PP-00 to “0”.

Chapter 4 Parameters Description

Group P0 Basic Function

P0-01	Control mode		Factory default	0
	Setting range	0	V/F control	
		1	Sensorless vector control	

0: V/F control
It is suitable for general purpose application such as pumps, fans etc. One inverter can drive multiple motors.
1: Sensorless vector control
It is widely used for the application which requires high torque at low speed, high speed accuracy, and quicker dynamic response, such as machine tool, injection molding machine, centrifugal machine and wire-drawing machine, etc.

P0-02	Running Command source		Factory default	0
	Setting range	0	0: Keypad (LED OFF)	
		1	1: Terminal (LED ON)	
		2	2: Communication (LED flickers)	

Select the input channel for control command. The inverter control commands include start, stop, forward run, reverse run, Jog and so on.

0: Keypad (“LOCAL/REMOT” LED OFF)
Both RUN and STOP/RST keys are used for running command control. If multifunction key QUICK/JOG is set as FWD/REV switching function (P7-01 is set to be 2), it will be used to change the rotating orientation. If multifunction key QUICK/JOG is set as FWD jog (P7-01 is set to be 3) or REV jog (P7-01 is set to be 4), it will be used for jog running.

1: Terminal (“LOCAL/REMOT” LED ON)
The operations, including FWD, REV, JOGF, JOGR, etc. can be controlled by multifunctional input terminals.

2: Communication (“LOCAL/REMOT” LED flickers)
The operation of inverter can be controlled by host through communication.

P0-09	Running direction		Factory default	0
	Setting range	0	Direction is forward	
		1	Direction is reverse	

Through modifying this function code, it can change the rotary direction of the motor without changing motor wiring. It’s equal to adjust any two lines of the motor (U, V and W) and further change the rotary direction of the motor.

Note: If the parameters are restored, the running direction will be back to its original status. For the

pump application, the running direction must be correct, otherwise the system cannot work properly.

P0-10	Maximum frequency	Factory default	50.00Hz
	Setting range	50.00Hz ~ 300.00Hz	

P0-12	Frequency upper limit	Factory default	50.00Hz
	Setting range	P0-14 (frequency lower limit) ~ P0-10 (maximum frequency)	
P0-13	Frequency upper limit offset	Factory default	0.00Hz
	Setting range	0.00Hz ~ P0-10 (maximum frequency)	

When the frequency source upper limit is analog value or HDI pulse, P0-13 is used as the setting value's offset. The combination of this offset frequency and P0-12 is used as the final setting value of frequency upper limit.

P0-14	Frequency lower limit	Factory default	0.00Hz
	Setting range	0.00Hz ~ P0-12 (frequency upper limit)	

If the reference frequency is lower than frequency lower limit, the inverter can stop, or run with lower limit frequency, or run at zero speed, which is set by P8-14.

P0-17	Acceleration time 1	Factory default	Model depend
	Setting range	0.00s ~ 36000s	
P0-18	Deceleration time 1	Factory default	Model depend
	Setting range	0.00s ~ 36000s	

Acceleration time is the time of accelerating from 0Hz to 50Hz.
Deceleration time is the time of decelerating 50Hz to 0Hz.

Group P1 Motor Parameters

P1-00	Motor type		Factory default	0
	Setting range	0	Common asynchronous motor	
		1	Variable frequency asynchronous motor	
P1-01	Motor rated power		Factory default	Model depend
	Setting range		0.1kW ~ 1000.0kW	
P1-02	Motor rated voltage		Factory default	Model depend
	Setting range		1V ~ 2000V	
P1-03	Motor rated current		Factory default	Model depend
	Setting range		0.01A ~ 655.35A (Inverter power≤55kW) 0.1A ~ 6553.5A (Inverter power＞55kW)	
P1-04	Motor rated frequency		Factory default	Model depend
	Setting range		0.01Hz ~ P0-10 (maximum frequency)	
P1-05	Motor rated speed		Factory default	Model depend
	Setting range		1rpm ~ 65535rpm	

Please set the parameters correctly according to the motor nameplate even using V/f control mode.

P1-06	Motor stator resistance	Factory default	Model depend
	Setting range	0.001Ω ~ 65.535Ω (Inverter power≤55kW) 0.0001Ω ~ 6.5535Ω (Inverter power＞55kW)	
P1-07	Motor rotor resistance	Factory default	Model depend
	Setting range	0.001Ω ~ 65.535Ω (Inverter power≤55kW) 0.0001Ω ~ 6.5535Ω (Inverter power＞55kW)	
P1-08	Motor leakage inductive	Factory default	Model depend
	Setting range	0.01mH ~ 655.35mH (Inverter power≤55kW) 0.001mH ~ 65.535mH (Inverter power＞55kW)	
P1-09	Motor mutual inductive	Factory default	Model depend
	Setting range	0.1mH ~ 6553.5mH (Inverter power≤55kW) 0.01mH ~ 655.35mH (Inverter power＞55kW)	
P1-10	Motor current without load	Factory default	Model depend
	Setting range	0.01A ~ P1-03 (Inverter power≤55kW) 0.1A ~ P1-03 (Inverter power＞55kW)	

Group P3 V/F Control Parameters

This group of function code is enabled only for V/F control (P0-01=2) and is invalid for vector control.
V/F control is applicable for the general loads such as fan and pump or the applications where one inverter drives multiple motors or the inverter power is one level lower or higher than the motor power.

P3-00	V/F curve setting		Factory default	2
	Setting range	0	Linear V/F curve	
		1	Multiple-point V/F curve	
		2	Square V/F curve	
		3	1.2 power V/F	
		4	1.4 power V/F	
		6	1.6 power V/F	
		8	1.8 power V/F	

0: Linear V/F curve. It is suitable for common constant torque load.
1: Multiple-point V/F curve. It is suitable for the special loads such as dehydrator and centrifugal machine.
2: Square V/F curve. It is suitable for the centrifugal loads such as fan and pump.
3~8: VF curve between linear VF and square VF.

P3-01	Torque boost	Factory default	Model depend
	Setting range	0.0% ~ 30%	
P3-02	Cut-off frequency of torque boost	Factory default	50.00Hz
	Setting range	0.00Hz ~ P0-10 (maximum frequency)	

To compensate the low frequency torque characteristics of V/F control, it can boost the inverter output voltage during low frequency. If the torque boost is set to too large, the motor may be over heat, and the inverter may be over current.
Adjust this parameter according to the different loads. Increase this parameter for heavy load, reduce it for light load.
When the torque boost is set to 0.0, the inverter will adopt auto torque boost.
Cut-off frequency of torque boost: Under this frequency, the torque boost is valid. If it exceeds this setting frequency, the torque boost is invalid. Refer to Figure 4-1 for details.

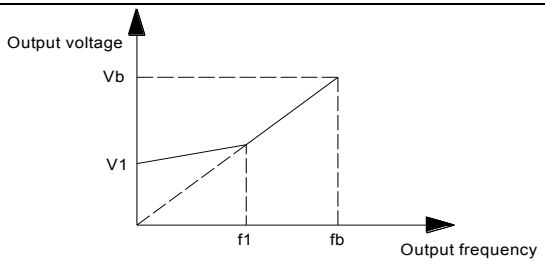

V1:Manual torque boost voltage Vb:Maximum output voltage
f1:Manual torque boost voltage fb:Rated running frequency

Figure 4-1 Manual torque boost diagram

P3-09	V/F slip compensation gain	Factory default	0.0%
	Setting range	0% ~ 200.0%	

It is valid only for V/F control.
Setting this parameter can compensate the slip of motor speed caused by the load increases, and makes the motor speed stably when the load changes.
V/F slip compensation gain set to 100% means the slip compensation of the motor with rated load is the motor rated slip, which can be calculated according to motor rated power and motor rated speed automatically.
Slip gain adjustment can refer to the following principle: When the load is rated load, the motor speed is basically the same as the target speed. When the values are different, please adjust this gain properly.

P3-10	V/F over-excitation gain	Factory default	64
	Setting range	0 ~ 200	

During deceleration, over excitation control can suppress bus voltage increase, avoid over voltage fault. The bigger over excitation gain is, the better suppression result is.
For the application which over voltage fault happens frequently during deceleration, the over excitation gain needs to be increased. But the current would be increased if the over excitation is too bigger, so you need to set the suitable over excitation gain.
For the small inertia situation, voltage doesn't increase during motor deceleration, please set over excitation gain to 0. For the application with braking resistor, please also set over excitation gain to 0.

P3-11	V/F oscillation suppression gain	Factory default	Model depend
	Setting range	0 ~ 100	

Set the gain as small as possible on the premise that there is effective oscillation suppression measure, which can avoid the affect causing to VF running. Set the gain to 0 when the motor has no oscillation. Only when the motor has obvious oscillation, this gain can be increased properly. The bigger the gain is, the better oscillation suppression result will be.
When using this function, please make sure the motor rated current and no load current parameters are accurate, otherwise V/F oscillation suppression result would be bad.

Group P4 Input Terminal

The standard Inverter has 7 multifunctional digital input terminals (HDI can be used as high speed pulse input terminal) and two analog input terminals.

P4-00	D1 terminal function	Factory default	51
P4-01	D2 terminal function	Factory default	52
P4-02	D3 terminal function	Factory default	53
P4-03	D4 terminal function	Factory default	0
P4-04	D5 terminal function	Factory default	0
P4-05	D6 terminal function	Factory default	0
P4-06	HDI terminal function	Factory default	0

These parameters are used to set the functions of the multifunctional digital input terminals.

Setting value	Function	Description
0	No function	The no operation function can be set on the unused terminals so as to prevent error action.
1	Forward (FWD)	Control the inverter forward and reverse via the external terminals.
2	Reverse (REV)	
3	Three-line running control	This terminal is used to confirm that the inverter running mode is three-line control mode. Refer to P4-11 (terminal command mode) for details.
4	Forward Jog (FJOG)	FJOG refers to Jog forward running, RJOG refers to Jog reverse running. Regarding Jog running frequency and Jog ACC/DEC time, please refer to P8-00, P8-01 and P8-02.
5	Reverse Jog (RJOG)	
6	Terminal UP	When the frequency is given by the external terminals, it is used as increment and decrement commands of frequency modification. When the frequency source is set by digital, it can be used to adjust the setting frequency.
7	Terminal DOWN	
8	Coast to stop	The inverter locks the output, and the motor stop process is beyond the inverter control. This mode is the same as the meaning of coast-to-stop as described in P6-10.
9	Fault reset (RESET)	External fault reset function. It is the same as the function of RESET key on the keyboard. Using this function can realize long-distance fault reset.
10	Pause running	The inverter decelerates to stop, but all the running parameters are in the memory status, such as PLC parameter, wobble frequency parameter and PID parameter. After this signal disappears, the inverter restores to the status before stopping.
11	External fault normally open input	After the signal is sent to the inverter, the inverter reports fault E-15 and acts according to the fault protection action mode (see P9-47).
51	Full water level detection	Detect the water level, if full water, pause pumping

Setting value	Function	Description
52	Low water level detection	Detect the water level, only if the signal is enabled, the pump can start
53	Water shortage detection	Detect the water level trough terminal, if the level is too low, prevent dry pumping

P4-10	DI Terminals filter time	Factory default	0.010s
	Setting range	0.000s ~ 1.000s	

It is used to set the sensitivity of DI terminal. If the digital input terminal is vulnerable to interferences and may cause error action, it can increase this parameter value to enhance the anti-interference capability. However, this operation will reduce the sensitivity of DI terminals.

P4-13	AI curve 1 minimum input	Factory default	0.00V
	Setting range	0.00V ~ P4-15	
P4-14	AI curve 1 minimum input corresponding setting	Factory default	0.0%
	Setting range	-100.00% ~ 100.0%	
P4-15	AI curve 1 maximum input	Factory default	10.00V
	Setting range	P4-13 ~ 10.00V	
P4-16	AI curve 1 maximum input corresponding setting	Factory default	100.0%
	Setting range	-100.00% ~ 100.0%	
P4-17	AI1 filter time	Factory default	0.10s
	Setting range	0.00s ~ 10.00s	

The above function codes define the relationship between the analog input voltage and analog input setting value.

When the analog input voltage is bigger than P4-15 (maximum input of AI curve 1), then calculate the analog voltage according to maximum input. When the analog input voltage is smaller than P4-13 (minimum input of AI curve 1), then calculate the analog voltage with minimum input or 0.0% according to P4-34 (AI below minimum input setting selection).

When the analog input is current input, 1mA current equals to 0.5V voltage.

AI1 input filter time is used to set AI1 software filter time, when the site analog signal can be easily disturbed, please increase filter time to stable the detected analog signal, but the bigger the filter time is, the slower the response speed of the analog detection is . So please set this parameter according to the situation.

In difference applications, 100% of analog input corresponds to different nominal values. Refer to all the application parts for details.

Several setting examples are shown in the following figures:

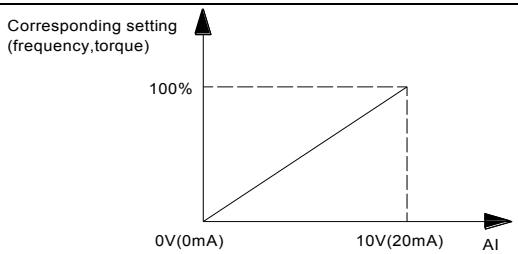

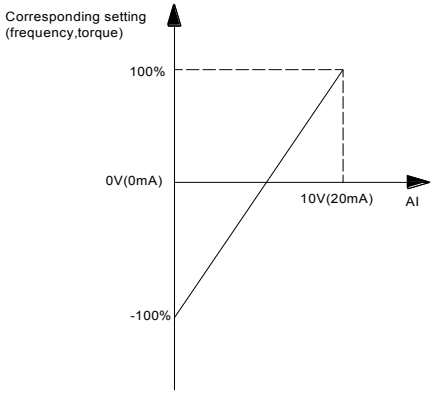

Figure 4-2 Corresponding Relationship between Analog Reference and Setting

P4-18	AI curve 2 minimum input		Factory default	0.00V
	Setting range	0.00V ~ P4-20		
P4-19	AI curve 2 minimum input corresponding setting		Factory default	0.0%
	Setting range	-100.00% ~ 100.0%		
P4-20	AI curve 2 maximum input		Factory default	10.00V
	Setting range	P4-18 ~ 10.00V		
P4-21	AI curve 2 maximum input corresponding setting		Factory default	100.0%
	Setting range	-100.00% ~ 100.0%		
P4-22	AI2 filter time		Factory default	0.10s
	Setting range	0.00s ~ 10.00s		

P4-23	AI curve 3 minimum input		Factory default	0.00V
	Setting range	-10.00V ~ P4-25		
P4-24	AI curve 3 minimum input corresponding setting		Factory default	0.0%
	Setting range	-100.00% ~ 100.0%		
P4-25	AI curve 3 maximum input		Factory default	10.00V
	Setting range	P4-23 ~ 10.00V		

P4-26	AI curve 3 maximum input corresponding setting		Factory default	100.0%
	Setting range	-100.00% ~ 100.0%		
P4-27	Keypad potentiometer input filter time		Factory default	0.10s
	Setting range	0.00s ~ 10.00s		

P4-28	HDI minimum input		Factory default	0.00kHz
	Setting range	0.00kHz ~ P4-30		
P4-29	HDI minimum input corresponding setting		Factory default	0.0%
	Setting range	-100.00% ~ 100.0%		
P4-30	HDI maximum input		Factory default	50.00kHz
	Setting range	P4-28 ~ 100.00kHz		
P4-31	HDI maximum input setting		Factory default	100.0%
	Setting range	-100.00% ~ 100.0%		
P4-32	HDI filter time		Factory default	0.10s
	Setting range	0.00s ~ 10.00s		

This group of function code defines the corresponding relationship when the pulse is used as frequency setting mode.

The pulse frequency input can only be input via HDI channel. The applications of this group function are similar as those of AI curve 1 function.

P4-33	AI curve selection		Factory default	321
	Setting range	Units place	AI1 curve selection	
		1	Curve 1 (see P4-13 ~ P4-16)	
		2	Curve 2 (see P4-18 ~ P4-21)	
		3	Curve 3 (see P4-23 ~ P4-26)	
		Tens place	AI2 curve selection, ibid	

Units place and tens place of this function code are used to select analog input AI1, AI2 corresponding setting curve.

Curve 1, curve 2, curve 3 are 2 points curves, set by P4 group.

Standard inverter has 2 analog input terminals.

P4-34	AI below minimum input setting selection		Factory default	000
	Setting range	Units place	AI1 below minimum input setting selection	
		0	Correspond to minimum input setting	
		1	0.0%	
		Tens place	AI2 below minimum input setting selection (0 ~ 1, ibid)	
		Hundreds place	Keypad potentiometer below minimum input setting selection (0 ~ 1, ibid)	

The parameter is used to set how to confirm the analog corresponding setting when the analog input voltage is lower than the setting “the minimum input”.
Units place, tens place and hundreds place of this function code correspond to the analog input AI1, AI2 and Keypad potentiometer.
If the selection is 0, when AI input is lower than “the minimum input”, the analog value corresponding setting is the curve “the minimum input corresponding setting” (P4-14, P4-19, P4-24) determined by the function code.
If the selection is 1, when AI input is lower than “the minimum input”, the analog value corresponding setting is 0.0%.

P4-35	DI1 delay time		Factory default	0.0s
	Setting range	0.0s ~ 3600.0s		
P4-36	DI2 delay time		Factory default	0.0s
	Setting range	0.0s ~ 3600.0s		
P4-37	DI3 delay time		Factory default	0.0s
	Setting range	0.0s ~ 3600.0s		

Used to set the delay time when DI terminal status changing.
Currently only DI1, DI2, DI3 have setting delay time function.

Group P5 Output Terminal

P5-01	HDO open collector output selection	Factory default	0
P5-02	Relay 1 output function selection	Factory default	2
P5-03	Relay 2 output function selection	Factory default	0

The parameters are used to select the functions of 3 digital outputs.
Multifunctional output terminal function selection is as follows:

Setting value	Function	Description
0	No output	The output terminals do not have any functions.
1	Inverter is running	It indicates the inverter is running, and there is output frequency (can be zero), and the inverter outputs ON signal at this time.
2	Fault output (fault stop)	When the inverter is faulty & it stops, it outputs ON signal.
3	FDT1 output	Please refer to P8-19 and P8-20 for details.
4	Frequency arrival	Please refer to P8-21 for details.
5	Zero speed running (no output when stop)	When the inverter is running & the output frequency is 0, it outputs ON signal. When the inverter stopped, the signal is OFF.
6	Motor overload pre-alarm	Judgment will be made according to the pre-warning threshold value before the motor overload protection action. If it exceeds the pre-warning threshold, it will output ON signal. Motor overload parameters are set in P9-00 to P9-02.
7	Reserved	Reserved
8	Reserved	Reserved
9	Reserved	Reserved
10	Reserved	Reserved
11	PLC circulation completion	When the simple PLC has been running for one cycle, it outputs a pulse signal with width of 250ms.
12	Accumulated running time arrival	When the accumulated running time of the inverter exceeds the setting time P8-17, it outputs ON signal.
13	Frequency limiting	When the setting frequency exceeds the frequency upper limit or frequency lower limit, and the output frequency of the inverter reaches the frequency upper limit or frequency lower limit, it outputs ON signal.
14	Torque limiting	In speed control mode, when the output torque reaches torque limit, the inverter is in stall protection status and outputs ON signal.
15	Ready for running	When the main circuit and control circuit power supply are connected, the inverter protection function is invalid, and the inverter is in running status, it outputs ON signal.

Setting value	Function	Description
16	AI1>AI2	When analog input AI1 is bigger than AI2, the inverter outputs ON signal.
17	Frequency upper limit arrival	When the running frequency reaches frequency upper limit, it outputs ON signal.
18	Frequency lower limit arrival (no output when stop)	When the running frequency reaches frequency lower limit, it outputs ON signal. The signal is OFF when stop.
19	Under voltage status output	During under voltage, the inverter outputs ON signal.
20	Communication setting	Refer to the communication protocol
21	Reserved	Reserved
22	Reserved	Reserved
23	Zero-speed running 2 (output when stop)	When the output frequency is 0Hz, the inverter outputs ON signal. The signal is still ON when stop.
24	Accumulated power-on time arrival	The accumulated power-on time (P7-13) exceeds the time set by P8-16, the inverter outputs ON signal.
25	FDS2 output	Please refer to P8-28, P8-29 description.
26	Frequency 1 arrival output	Please refer to P8-30, P8-31 description.
27	Frequency 2 arrival output	Please refer to P8-32, P8-33 description.
28	Reserved	Reserved
29	Reserved	Reserved
30	Reserved	Reserved
31	AI1 input over limit	When analog input AI1 is bigger than P8-46 (AI1 input protection upper limit) or lower than P8-45 (AI1 input protection lower limit), outputs ON signal.
32	Off load	When inverter is in the off-load state, it outputs ON signal.
33	Reverse running	When reverse running, the inverter outputs ON signal.
34	Zero current status	Please refer to description of P8-34, P8-35.
35	Module temperature arrival	The temperature of converter module radiator (P7-07) reaches the set value of module temperature arrival (P8-47), the inverter outputs ON signal.
36	Output current over limit	Please refer to description of P8-36, P8-37.
37	Lower limit frequency arrival (output when stop)	When running frequency reaches lower limit frequency, outputs ON signal. The signal is still ON when stop.
38	Warning output (keep running)	When a fault happens & the process mode of this fault is keeping running, the inverter outputs warning.

Group P6 Start and Stop Control

P6-00	Start mode		Factory default	0
	Setting range	0	Direct start	
		1	Speed tracking and restart	
		2	Pre-excitation start	

0: Direct start
If DC braking time is set to 0, the inverter will start from the start frequency.
If DC braking time is set to nonzero value, DC braking will be performed firstly, then the inverter starts from the start frequency. It is suitable for the application that the motor maybe running during starting with small inertia load.
1: Speed tracking and restart
Inverter detects the rotation speed and direction of motor, and then starts to run at the detected speed and direction. This can realize smooth start of running motor with big inertia load when instantaneous power-off. To ensure the performance of speed tracking restart, please set motor parameters accurately. (Group P1)
2: pre-excitation start
Only valid for asynchronous motor, used to establish magnetic field before motor running. For pre-excitation current, pre-excitation time, please refer to P6-05, P6-06 instruction.
If pre-excitation time is set to 0, the inverter will cancel the pre-excitation process, start from the starting frequency. Or the inverter will make the pre-excitation, then start, which can improve the motor dynamic response performance.

P6-01	Speed tracking mode		Factory default	0
	Setting range	0	Begin from stop frequency	
		1	Begin from zero speed	
		2	Begin from maximum frequency	

To complete the speed tracking process in the shortest time, select the suitable mode of inverter tracking motor speed:
0: To track from the frequency when stop, normally it adopts this mode.
1: To track from zero-frequency, suitable for the application that restart after a long time power-off.
2: To track from maximum frequency and suitable for the general power generating loads.

P6-02	Speed tracking speed		Factory default	20
	Setting range	1 ~ 100		

It is used to select the speed tracking speed when speed tracking and restart.
The bigger this parameter is, the faster the tracking speed is. But too big value may result in unreliable tracking.

P6-03	Start frequency		Factory default	0.00Hz
	Setting range	0.00Hz ~ 10.00Hz		
P6-04	Start frequency holding time		Factory default	0.0s
	Setting range	0.0s ~ 100.0s		

Set proper start frequency can increase the start torque.
If the reference frequency is less than start frequency, inverter will be at stand-by status, and has no output.
The start frequency could be less than the lower frequency limit.
P6-04 takes no effect during FWD/REV switching.
Example 1:

P0-03=0	Frequency source is digital reference
P0-08=2.00Hz	Digital setting frequency is 2.00Hz.
P6-03=5.00Hz	Start frequency is 5.00Hz.
F6-04=2.0s	Start frequency holding time is 2.0s.

At this time, the inverter is at standby status, and the output frequency is 0Hz.
Example 2:

P0-03=0	Frequency source is digital setting.
P0-08=10.00Hz	Digital setting frequency is10.00Hz.
P0-03=5.00Hz	Start frequency is 5.00Hz.
P0-04=2.0s	Start frequency holding time is 2.0s.

At this time, the inverter accelerates to 5Hz, and further to the reference frequency 10Hz in 2s.

P6-05	DC braking current before start/pre-excitation current		Factory default	0%
	Setting range	0% ~ 100%		
P6-06	DC braking time before start/pre-excitation time		Factory default	0.0s
	Setting range	0.0s ~ 100.0s		

DC braking is used to make the running motor stop & restart. Pre-excitation is used to establish asynchronous motor magnetic field, then start, improve the response speed.
DC braking is only valid when start directly, the inverter performs DC braking according to P6-05 firstly, and runs after P6-06. If DC braking time is 0, the inverter starts directly. The bigger the DC braking current is, the greater the braking force is.
If the start mode is pre-excitation start, then the inverter establishes magnetic field according to the set pre-excitation current firstly, runs after the set pre-excitation time. If the pre-excitation time is 0, the inverter starts directly.
DC braking current before start/pre-excitation current refers to the percentage of the inverter rated current.

P6-10	Stop mode		Factory default	0
	Setting range	0	Deceleration to stop	
		1	Coast to stop	

0: Deceleration to stop
After the stop command is valid, the inverter reduces the output frequency according to the DEC time and will stop after the frequency reduces to zero.
1: Coast to stop
After the stop command is valid, the inverter blocks the output immediately, and the motor coasts to stop according to the mechanical inertia.

Group P9 Fault and Protection

P9-00	Motor overload protection selection		Factory default	1
	Setting range	0	Invalid	
		1	Valid	
P9-01	Motor overload protection gain		Factory default	1.00
	Setting range		0.20 ~ 10.00	

P9-00=0: Has no motor overload protection function, may cause the motor overheating damaged.
P9-00=1: The inverter judges whether the motor is overload or not according to the inverse time limit curve of motor overload protection.
The inverse time limit curve of motor overload protection: 220% * (P9-01) * motor rated current, lasts for one second, the overload fault would be reported; 150% * (P9-01) * motor rated current, lasts for 60 seconds, the overload fault would be reported.
Please set P9-01 according to the motor overload ability. If the parameter is too big, the motor will over heat damage without alarming.

P9-02	Motor overload pre-warning coefficient		Factory default	80%
	Setting range	50% ~ 100%		

For safe consideration, there is a pre-warning signal sent to the control system via DO before the motor overload fault protection, the pre-warning coefficient is used to confirm the extent of pre-warning before the motor overload protection. The bigger the parameter is, the smaller the pre-warning lead is.
After the accumulated output current is bigger than (P9-02)*overload inverse time limit curve, DO outputs “motor overload pre-warning” ON signal.

P9-03	Over-voltage stall gain		Factory default	0
	Setting range	0 (No over voltage stall) ~ 100		
P9-04	Over-voltage stall protection voltage		Factory default	130%
	Setting range	120% ~ 150% (three phase)		

During deceleration, after DC bus voltage exceeds over-voltage stall protection voltage, the inverter stops deceleration & runs with the current frequency, continue decelerating after bus voltage drops.
Over-voltage stall gain is used to adjust the suppression over-voltage capacity during deceleration. The bigger this value is, the stronger the capacity is. Under the precondition of no over-voltage, please set the gain as small as possible.
For the load with small inertia, the value should be small. Otherwise, the dynamic response of the system will be slow. For the load with big inertia, the value should be big. Otherwise, the suppression result will be poor, and over voltage fault may occur.
When the value is 0, the over voltage stall function is invalid.

P9-05	Over-current stall gain		Factory default	20
	Setting range	0 ~ 100		
P9-06	Over-current stall protection current		Factory default	160%
	Setting range	100% ~ 200%		

During the inverter ACC/DEC, when the output current exceeds over-current stall protection current, the inverter stops ACC/DEC, runs with the current frequency, continue ACC/DEC after the output current is

reduced.

Over-current stall gain is used to adjust the suppression over-current capacity during ACC/DEC. The bigger this value is, the stronger the capacity is. Under the precondition of no over-current, please set the gain as small as possible.

For the load with small inertia, the value should be small. Otherwise, the dynamic response of the system will be slow. For the load with big inertia, the value should be big. Otherwise, the suppression result will be poor, and over-current fault may occur.

When the value is 0, the over-voltage stall function is invalid.

P9-09	Fault auto reset times		Factory default	0
	Setting range	0 ~ 5		

After the inverter fails in running process, the inverter stops its output; then performs auto fault reset and continues running after the reset interval defined in P9-11.

P9-09 is used to set fault auto reset times. After this value is exceeded, the inverter will keep fault status.

When the fault auto reset time is setup to 0, there is no auto-reset function, and only manual reset can be done.

P9-10	Faulty HDO action selection during fault auto resetting		Factory default	0
	Setting range	0: No action 1: Action		

If fault auto reset function is valid, during fault auto resetting, fault reply action or not can be set via P9-10.

P9-11	Fault auto reset interval		Factory default	1.0s
	Setting range	0.1s ~ 100.0s		

The waiting time of the inverter from the fault alarm to auto reset.

P9-12	Input phase failure protection selection		Factory default	0
	Setting range	0: Invalid 1: Valid		

This function is invalid for all KE300A-01 series inverters.

P9-13	Output phase failure protection selection		Factory default	1
	Setting range	0: Invalid 1: Valid		

Select to protect output phase failure or not. This function is invalid for single phase output 220V inverters.

P9-14	The first fault type	0 ~ 50
P9-15	The second fault type	
P9-16	The third (last) fault type	

It is used to record the fault types of last three times: 0 indicates no fault, please refer to Chapter 8 for solutions.

P9-17	The third fault frequency	The last fault frequency
P9-18	The third fault current	The last fault current

P9-19	The third (last) fault bus voltage	The last fault bus voltage
P9-20	The third fault type output terminal status	The last fault type output terminal status, sequence: when the input terminal is ON, the corresponding binary bit is 1, when the input terminal is OFF, the corresponding binary bit is 0. All DI statuses are displayed as decimal numbers.
P9-21	The third fault type output terminal	The last fault type output terminal status, sequence: when the input terminal is ON, the corresponding binary bit is 1, when the input terminal is OFF, the corresponding binary bit is 0. All DO statuses are displayed as decimal numbers.
P9-22	The third fault inverter status	The last fault inverter status
P9-23	The third (last) fault power on time	The last fault power on time
P9-24	The third (last) fault running time	The last fault running time
P9-27	The second fault frequency	Same as P9-17 ~ P9-24
P9-28	The second fault current	
P9-29	The second fault bus voltage	
P9-30	The second fault input terminal status	
P9-31	The second fault output terminal status	
P9-32	The second fault inverter status	
P9-33	The second fault power on time	
P9-34	The second fault running time	
P9-37	The first fault frequency	Same as P9-17 ~ P9-24
P9-38	The first fault current	
P9-39	The first fault bus voltage	
P9-40	The first fault input terminal status	
P9-41	The first fault output terminal status	
P9-42	The first fault inverter status	
P9-43	The first fault power on time	
P9-44	The first fault running time	

9-47	Fault protection action selection 1		Factory default	00000
	Setting range	Units place	Motor overload (E-11)	
		0	Coast to stop	
		1	Dec-to-stop	
		2	Keep running	
		Tens place	Input phase failure (E-12) (same as units place)	
		Hundreds place	Output phase failure (E-13) (same as units place)	

		Thousands place	External fault (E-14) (same as units place)	
		Ten thousands place	Communication fault (E-15) (same as units place)	
P9-48	Fault protection action selection 2		Factory default	00000
	Setting range	Units place	Reserved	
		Tens place	E^2PROM W/R fault (E-21)	
		0	Coast to stop	
		1	Dec-to-stop	
		Hundreds place	Reserved	
		Thousands place	Reserved	
		Ten thousands place	Running time arrival (E-26) (same as units place of P9-47)	
P9-49	Fault protection action selection 3		Factory default	00000
	Setting range	Units place	Customized fault 1 (E-27) (same as units place of P9-47)	
		Tens place	Customized fault 2 (E-28) (same as units place of P9-47)	
		Hundreds place	Power-on time arrival (E-29) (same as P9-487 units place)	
		Thousands place	Off load (E-30)	
		0	Coast to stop	
		1	Dec-to-stop	
		2	Deceleration to 7% of motor rated power, then keep running; run at setting frequency when no off-load	
		Ten thousands place	PID feedback lost when running (E-31) (same as units place of P9-47)	
P9-50	Fault protection action selection 4		Factory default	00000
	Setting range	Units place	Speed deviation oversize (E-42) (same as units place of P9-47)	
		Tens place	Motor over speed (E-43) (same as units place of P9-47)	
		Hundreds place	Reserved	
		Thousands place	Reserved	
		Ten thousands place	Reserved	

When the selection is “Coast to stop”, the inverter shows E-** and stops directly.

When the selection is “Dec- to-stop”, the inverter shows A-** and decelerates to stop, then shows E-** after stopping.

When the selection is “keep running”, the inverter shows A-** and keeps running, the running frequency is set by P9-54.

P9-54	Running frequency selection continuously when fault		Factory default	0
	Setting range	0	Run at current running frequency	
		1	Run at setting frequency	
		2	Run at upper limit frequency	
		3	Run at lower limit frequency	
		4	Run at abnormal backup frequency	
P9-55	Abnormal backup frequency		Factory default	100.0%
	Setting range		60.0% ~ 100.0%	

When a fault happens during running and the fault process mode is keep running, the inverter shows A-** with the frequency set by P9-54.

When the inverter is running with the abnormal backup frequency, the value set by P9-55 corresponds to maximum frequency percentage.

P9-59	Instantaneous power-off action		Factory default	0
	Setting range	0	Invalid	
		1	Deceleration	
		2	Dec-to-stop	
P9-60	Instantaneous power-off recover judgment voltage		Factory default	90.0%
	Setting range		80.0% ~ 100.0%	
P9-61	Instantaneous power-off voltage recover judgment time		Factory default	0.50s
	Setting range		0.00s ~ 100.00s	
P9-62	Instantaneous power-off action judgment voltage		Factory default	80.0%
	Setting range		60.0% ~ 100.0% (standard bus voltage)	

The function is that, when instantaneous power off or voltage drops suddenly, the inverter will reduce output speed to decrease compensation voltage for DC bus which is generated by the load feedback energy, so that keep the inverter running.

P9-59=1: When instantaneous power off or voltage drops suddenly, the inverter decelerates, when bus voltage returns to normal, the inverter accelerates to the setting frequency and runs. Normal bus voltage lasts for longer than the time set by P9-61 means that bus voltage returns to normal.

P9-59=2: When instantaneous power off or voltage drops suddenly, the inverter decelerates to stop.

Group PP Function Code Management

PP-00	User password	Factory default	0
	Setting range	0 ~ 65535	

Any non-zero number can be set, and then the password protection function will be enabled. When user enters into the menu next time, "-----" will be displayed, please input the right password, otherwise the parameters cannot be checked or modified.
0000: Clear the previous password and disable the password protection function.

PP-01	Parameter initialization		Factory default	0
	Setting range	0	No operation	
		1	Restore factory default, but not including motor parameters	
		2	Clear the fault record	

1. Restore to factory default, but not including motor parameters.
After PP-01 is set to 1, most of the inverter function parameters are restored to the factory default settings, except motor parameters, frequency command decimal place (P0-22), fault record information, accumulated running time (P7-09), accumulated power on time (P7-13), accumulated power consumption (P7-14).
2. Clear the record information.
Clear the fault record information, accumulated running time (P7-09), accumulated power on time (P7-13), accumulated power consumption (P7-14).

PP-02	Function parameter group display selection	Factory default	00
	Reserved		
PP-03	Reserved		

The setting of parameter display mode is convenient for users to view the function parameter of different spread patterns according to the actual demand.

Group PC Special Parameters for Solar Pump Inverter

PC-00	Power supply selection		Factory default	0
	Setting range	0	Solar power	
		1	Others	

When setting PC-00 to be 0, the power supply is from solar panels, this group parameters become valid. While setting it to be 1, it means to use other power supplies, like grid power etc., thus, this group parameters are invalid.

PC-01	MPPT mode		Factory default	0
	Setting range	0	Dynamic tracking	
		1	Constant voltage	
PC-02	Voltage setting under constant mode		Factory default	Model depend
	Setting range	0～750V		

This function is to set the output voltage setting mode under the maximum output power point of solar system. When PC-01=0, the output voltage adjusts dynamically, to ensure the system output power always is at maximum point.
When PC-01=1, to fix the output voltage at a constant value by PC-02. The stability is better under this mode.

PC-03	Minimum MPPT voltage		Factory default	Model depend
	Setting range	0～PC-04		
PC-04	Maximum MPPT voltage		Factory default	Model depend
	Setting range	PC-03～750V		

To set the tracking voltage range while setting PC-01=0 (dynamic tracking),
PC-03 and PC-04 are used to set the minimum and maximum reference voltage under the dynamic MPPT tracking mode. The faster the tracking is, if the range is smaller, but the voltage of maximum power point must be in this range.

PC-05	Proportional gain Kp1		Factory default	200
	Setting range	0～1000		
PC-06	Integration time Ti1		Factory default	2.00s
	Setting range	0.01～5.00s		
PC-07	Reserve		Factory default	0
	Setting range	0～10000		

Proportional gain Kp1：
It decides the adjustment intensity of PI proportional regulator. The higher the Kp1 is, the stronger the adjustment intensity is.

Integration time Ti1：

It decides the intensity of the integration adjustment of PI integral regulator. The shorter the Ti1 is, the stronger the adjustment intensity is.

PC-08	Proportional gain Kp2	Factory default	400
	Setting range	0～1000	
PC-09	Integration time Ti2	Factory default	2.00s
	Setting range	0.01～5.00s	
PC-10	Reserved	Factory default	0
	Setting range	0～10000	

Same setting as PC-05 and PC-06.

PC-11	Reserved	Factory default	0
	Setting range	0～10000	

PC-12	Maximum output value of forward running	Factory default	0.1%
	Setting range	0.0～100.0%	
PC-13	Maximum output value of reverse running	Factory default	0.1%
	Setting range	0.0～10.00%	

Output limitation value of PI intergration.

PC-14	Reserved	Factory default	0
	Setting range	0～10000	

PC-15	Reserved	Factory default	0.1%
	Setting range	0～10000	
PC-16	Reserved	Factory default	5.0%
	Setting range	0～10000	

PC-17	PI limitation deviation	Factory default	0.0%
	Setting range	0.0～100.0%	

PI deviation limitation, if the deviation value of setting and feedback is not in the range, the PI regulator stop to adjust.

PC-18	Minimum running frequency of pump	Factory default	0.00Hz
	Setting range	0.00～30.00Hz	

When the output frequency is equal or less than this setting, the system is under weak sunshine mode.

PC-19	Water level feedback channel selection	Factory default	0
	Setting range	0：No 1：Terminal 2：AI1 3：AI2	
PC-20	Full water level detection value	Factory default	25%
	Setting range	0～100%	
PC-21	Full water level detection delay time	Factory default	100s
	Setting range	0～3600s	
PC-22	Full water level warning auto-reset delay time	Factory default	200
	Setting range	10～3600s	

When PC-19 is not 0, the water level detection function is valid.
When PC-19 is 1, if the terminal detects full water level signal, the inverter pauses running and give a warning; if low water level signal, start to pump.
When PC-19 is 2 or 3, if the detected water level is less than the setting value of PC-20, after the delay time of PC-21, the inverter gives full water level warning, and the system stops and enters into standby mode.
Under the full water level warning condition, if the water level is higher than the setting value of PC-20, after the delay time of PC-22, the warning resets and inverter restarts automatically.

PC-23	Water level sensor disconnection detection value	Factory default	0
	Setting range	0～100%	
PC-24	Water level sensor disconnection detection delay time	Factory default	100
	Setting range	0～3600s	

When PC-19 is not 0, the fault detection of water level sensor is valid. When the detect water level is higher than PC-23, after the delay time of PC-24, the inverter gives the warning of water level sensor failure and then stops.

PC-25	Motor underload detection current value	Factory default	0%
	Setting range	0～100%	
PC-26	Motor underload detection delay time	Factory default	50s
	Setting range	0～3600s	
PC-27	Motor underload auto-reset time	Factory default	200s
	Setting range	10～3600s	

When PC-25 is 0, the terminal detects the low water level of well bottom. If the signal is detected, the inverter pauses running and gives a warning.
When the output current of motor is less than the setting value of PC-25, after the delay time of PC-26, the inverter gives motor underload warning and then stop.
Under the condition of underload warning, after the delay time of PC-27, the warning resets and inverter restarts automatically.

PC-28	Weak sunshine detection time	Factory default	60s
	Setting range	0～3600s	
PC-29	Weak sunshine auto-reset time	Factory default	60s
	Setting range	10～3600s	

When the output frequency of inverter is less than PC-18, after the delay time of PC-28, the inverter gives weak sunshine warning.
Under the condition of weak sunshine warning, after the delay time of PC-29, the warning resets and inverter restarts automatically.

PC-30	Automatic start voltage	Factory default	20V
	Setting range	10～200V	
PC-31	Automatic decelerate voltage	Factory default	30V
	Setting range	20～300V	

When the DC bus voltage of inverter is greater than the min. MPPT voltage plus PC-30, the inverter starts automatically.
When the DC bus voltage of inverter is less than the min. MPPT voltage minus PC-31, the inverter decelerates to be zero speed automatically.

Chapter 5 Trouble Shooting

5.1 Fault and Trouble Shooting

KE300A-01 series solar pump inverter has comprehensive warning information and protection functions, while the failures happen, the protection function will be activated, inverter stops the output and gives failure code on the keypad.

Before asking the service, customers can make self diagnosis based on the indications as below, to analyse the causes of failures and find out the solutions.

Fault Name	Converter short circuit protection
Fault Code	E-01
Reason	1. Short-circuit or ground fault occurred at inverter output side 2. The cable connecting the motor with the inverter is too long 3. The module is over-heat 4. The cable connections inside the inverter are loosen 5. The main board is abnormal 6. The power board is abnormal 7. The IGBT module is abnormal
Solution	1. Inspect whether motor damaged, insulation worn or cable damaged 2. Install a reactor or output filter 3. Check if the air duct is blocked and if the fan is in normal status, and resolve the existing problems 4. Make sure the cables are connected well

Fault Name	Over current when acceleration
Fault Code	E-02
Reason	1. Short-circuit or ground fault occurred at inverter output side 2. Control mode is vector control & motor parameters are not identified 3. The acceleration time is too short 4. The manual torque boost or V/F curve is not proper 5. The voltage is too low 6. Start the running motor 7. Load is added suddenly during the acceleration 8. Capacity of inverter is too small
Solution	1. Inspect whether motor damaged, insulation worn or cable damaged 2. Identify the motor parameters 3. Increase the acceleration time 4. Adjust the manual torque boost or V/F curve 5. Make the voltage in the normal range 6. Select speed tracking start or start the motor till it stops 7. Cancel the sudden added load 8. Select bigger capacity inverter

Fault Name	Over-current when deceleration
Fault Code	E-03
Reason	1. Short-circuit or ground fault occurred at inverter output side 2. Control mode is vector control & motor parameters are not identified 3. The deceleration time is too short 4. The voltage is too low 5. Load is added suddenly during the deceleration 6. Have not installed braking unit and braking resistor
Solution	1. Inspect whether motor damaged, insulation worn or cable damaged 2. Identify the motor parameters 3. Increase the deceleration time 4. Make the voltage in the normal range 5. Cancel the sudden added load 6. Install braking unit and braking resistor

Fault Name	Over-current when constant speed running
Fault Code	E-04
Reason	1. Short-circuit or ground fault occurred at inverter output 2. Control mode is vector control & motor parameters are not identified 3. The voltage is too low 4. Load is added suddenly during running 5. Capacity of inverter is too small
Solution	1. Inspect whether motor damaged, insulation worn or cable damaged 2. Identify the motor parameters 3. Make the voltage in the normal range 4. Cancel the sudden added load 5. Select bigger capacity inverter

Fault Name	Over-voltage when acceleration
Fault Code	E-05
Reason	1. The input voltage is too high 2. There is external force driving the motor to run during acceleration 3. The acceleration time is too short 4. Have not installed braking unit and braking resistor
Solution	1. Make the voltage in the normal range 2. Cancel the external force 3. Increase the acceleration time 4. Install braking unit and braking resistor

Fault Name	Over-voltage when deceleration
Fault Code	E-06
Reason	1. The input voltage is too high 2. There is external force driving the motor to run during deceleration 3. The deceleration time is too short 4. Have not installed braking unit and braking resistor
Solution	1. Make the voltage in the normal range 2. Cancel the external force 3. Increase the deceleration time 4. Install braking unit and braking resistor

Fault Name	Over-voltage when constant speed running
Fault Code	E-07
Reason	1. The input voltage is too high 2. There is external force driving the motor to run during the inverter running
Solution	1. Make the voltage in the normal range 2. Cancel the external force or install braking resistor

Fault Name	Power-supply fault
Fault Code	E-08
Reason	1. The input voltage is out of range
Solution	1. Make the voltage in the normal range

Fault Name	Under-voltage fault
Fault Code	E-09
Reason	1. Instantaneous power-off 2. The input voltage is out of range 3. Bus voltage is abnormal 4. The rectifier bridge and buffer resistor are abnormal 5. The power board is abnormal 6. The control board is abnormal
Solution	1. Fault Reset 2. Make the voltage in the normal range 3. Ask for technical support 4. Ask for technical support 5. Ask for technical support 6. Ask for technical support

Fault Name	Inverter over load
Fault Code	E-10
Reason	1. The load is too heavy or motor blockage occurs 2. Capacity of inverter is too small
Solution	1. Reduce the load, check the status of motor & machinery 2. Select bigger capacity inverter

Fault Name	Motor over load
Fault Code	E-11
Reason	1. P9-01 is set improperly 2. The load is too heavy or motor blockage occurs 3. Capacity of inverter is too small
Solution	1. Set P9-01 properly 2. Reduce the load, check the status of motor & machinery 3. Select bigger capacity inverter

Fault Name	Input phase failure
Fault Code	E-12
Reason	1. the input three phase power supply is abnormal 2. The power board is abnormal 3. The control board is abnormal 4. The thunder prevention board is abnormal
Solution	1. Check the power supply, and make it in normal 2. Replace the power board 3. Replace the control board 4. Replace the thunder prevention board

Fault Name	Output phase failure
Fault Code	E-13
Reason	1. The connection between inverter and motor is abnormal 2. Output voltage unbalance during the motor running 3. The power board is abnormal 4. The IGBT module is abnormal
Solution	1. Inspect whether motor damaged, insulation worn or cable damaged 2. Make sure the motor three phase winding is normal 3. Ask for technical support 4. Ask for technical support

Fault Name	IGBT module over-heat
Fault Code	E-14
Reason	1. Ambient temperature is too high 2. Air duct is blocked 3. Cooling fans are broken 4. Thermal resistor(temperature sensor) of the module is broken 5. IGBT module is broken
Solution	1. Reduce the ambient temperature 2. Clear the air duct 3. Replace cooling fans 4. Replace the thermal resistor 5. Replace IGBT module

Fault Name	Peripheral device fault
Fault Code	E-15
Reason	1. DI terminal receives an external fault signal generated by peripheral device
Solution	2. Reset running

Fault Name	Communication fault
Fault Code	E-16
Reason	1. Master computer works abnormal 2. Communication cable is abnormal 3. PD group is set improperly
Solution	1. Check the connection of master computer 2. Check the communication connection 3. Set PD group properly

Fault Name	Current detection fault
Fault Code	E-18
Reason	1. Hall device is abnormal 2. The power board is abnormal
Solution	1. Check hall device and connection 2. Replace the power board

Fault Name	EEPROM read/write fault
Fault Code	E-21
Reason	1. EEPROM chip is broken
Solution	1. Replace the main board

Fault Name	Inverter hardware fault
Fault Code	E-22
Reason	1. Over voltage 2. Over current
Solution	1. Handle as over voltage fault 2. Handle as over current fault

Fault Name	Short-circuit to ground fault
Fault Code	E-23
Reason	1. The motor is short-circuit to ground
Solution	1. Replace cables or motor

Fault Name	Accumulated running time arrival fault
Fault Code	E-26
Reason	1. The accumulated running time reaches the setting value
Solution	1. Clear the record information via parameter initialization function

Fault Name	Customized fault 1
Fault Code	E-27
Reason	1. DI terminal receives signal of customized fault 1
Solution	1. Reset running

Fault Name	Customized fault 2
Fault Code	E-28
Reason	1. DI terminal receives signal of customized fault 2
Solution	1. Reset running

Fault Name	Accumulated power-on time arrival fault
Fault Code	E-29
Reason	1. The accumulated power-on time reaches the setting value
Solution	1. Clear the record information via parameter initialization function

Fault Name	Off-load fault
Fault Code	E-30
Reason	1. The inverter running current is smaller than P9-64
Solution	1. Confirm if the load breaks away and P9-64 & P6-65 are set properly

Fault Name	PID feedback lost fault when running
Fault Code	E-31
Reason	1. PID feedback is smaller than PA-26
Solution	1. Check PID feedback signal or set PA-26 properly

Fault Name	Current-limiting fault
Fault Code	E-40
Reason	1. Whether the load is heavy or the motor is blocked 2. Capacity of inverter is too small.
Solution	1. Reduce the load and detect the motor & machinery condition 2. Select bigger capacity inverter

Fault Name	Water level sensor failure warning
Fault Code	E-41
Reason	1. Loose connection of sensor cables 2. Sensor fault
Solution	1. Check the connection of sensor cables 2. Replace a new sensor

Fault Name	Full water level warning
Fault Code	A-01
Reason	1. Water level is higher than limitation
Solution	1. The inverter will detect it and pause running automatically

Fault Name	Dry pumping warning
Fault Code	A-02
Reason	1. Pump works at low load
Solution	1. Check the water level 2. Check the current value

Fault Name	Weak sunshine warning
Fault Code	A-03
Reason	1. Pump works at min. running frequency
Solution	1. Check the setting of min. running frequency

5.2 Common Faults and Solutions

No.	Fault	Reason	Solution
1	No display when power-on	The input voltage is 0 or too low. The switching power supply on the power board is broken. Rectifier bridge is broken. Buffer resistors are broken. The control board or keypad is broken.	Check the input power-supply. Reconnect the keypad and 40-core flat cable.
2	E-23 is displayed when power-on	The motor or the output line is short circuited to the ground. The inverter is damaged.	Measure the insulation of the motor and output line with magneto-ohmmeter.
3	E-14 is displayed frequently	Carrier frequency is too high. Fans are broken or air duct is broken. The inverter inside components are broken (such as thermistor)	Reduce the carrier frequency (P0-15). Replace fans, clear the air duct.
4	Motor does not run after the inverter runs	Motor and motor cables are abnormal. The inverter parameters are set improperly (motor parameter). The connection of the cables of the power board and control board are not good. The power board is broken	Make sure the connection of the inverter and motor is very well. Replace the motor or clear the mechanical failure. Check & reset the motor parameters.
5	Digital terminal is invalid	The parameter is set improperly. The external signal is wrong. The jumper between PLC and +24V is loose. The control board is broken.	Check & reset P4 group parameters. Reconnect the external signal cable. Reconnect the jumper between PLC and +24V.
6	Over voltage and over current fault are displayed frequently	Motor parameters are set improperly. The ACC/DEC time is improper. The load fluctuates.	Reset motor parameters or perform auto tuning. Set proper ACC/DEC time.
7	Power on display 8.8.8.8.8	Inverter initialization failure. The relative components of the control board are broken.	Check the keypad and 40-core flat cable. Replace the control board.

Chapter 6 Commissioning Guide

1. When PC-00 = 1, if the inverter is running, press the STOP button to stop it.

2. Set Group P1 motor parameters, including P1-01, P1-02, P1-03, P1-04 and P1-05.

3. When PC-19 = 1, the water level detection is by terminal. Connect the high water level detection terminal to D1, low water level detection terminal to D2.
When PC-19 = 2 or 3, the water level detection is by analog input. If the detected water level is less than the setting value of PC-20, after the delay time of PC-21, the inverter gives full water level warning, and the system stops and enters into standby mode.
Under the full water level warning condition, if the water level is higher than the setting value of PC-20, after the delay time of PC-22, the warning resets and inverter restarts automatically.

When PC-25 is 0, the terminal detects the low water level of well bottom. Connect the high water level detection terminal to D3.
When PC-25 is not 0, if the output current of motor is less than the setting value of PC-25, after the delay time of PC-26, the inverter gives motor underload warning and then stop.
Under the condition of underload warning, after the delay time of PC-27, the warning resets and inverter restarts automatically.

NOTE: The system default detection is by terminal.

4. PC-03 and PC-04 are used to set the minimum and maximum reference voltage under MPPT tracking mode. Make sure the MPPT voltage point must be in this range, the system can achieve the best effect.

When the motor rated voltage is 380V, PC-03 = 460V, PC-04 = 600V. The recommended open circuit voltage is 650 - 700V.
When the motor rated voltage is 220V, PC-03 = 280V, PC-04 = 350V. The recommended open circuit voltage is 350 - 400V.
This parameter requires to be modified according to the site situation. (The minimum voltage should be higher 10V than P9-62, adjust P9-62 when necessary, but please notice the undervoltage point. The undervoltage point of 220V inverters is 200V, the point of 380V inverters is 300V.) No need to modify when the voltage is recommended open circuit voltage.

5. Motor running direction setting
Set PC-00 = 0, observe the water yield when the sunshine is normal. If the running frequency is low or the water yield is less, stop the inverter and set PC-00 = 1. If P0-09 is 1, then modify P0-09 to be 0. If P0-09 is 0, then modify P0-09 to be 1. Finally, set PC-00 to be 0.